DHCOM i.MX6





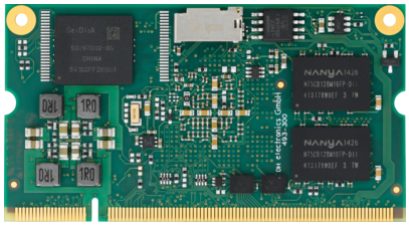

Leistungsfähiger Allrounder mit Solo, Dual, DualLite oder Quad Core.

- Hohe Flexibilität durch Solo, Dual, DualLite, Quad Core ARM Cortex-A9 Prozessor
- Mainline Open-Source-Linux (Etnaviv GPU-Treiber)
- CPU mit 2D/3D Grafikbeschleuniger und Bildverarbeitungseinheit
- Kein Kühlkörper dank 5-Cent Cooling Solution
- Kompatibel zu anderen Modulen aus der DHCOM Familie dank SODIMM-200 Sockel
- Garantierte Langzeitverfügbarkeit von 10+ Jahren

Technische Daten

Board type	Pluggable SOM
5-Cent Cooling available	✓
CPU details	2x Cortex-A9 up to 1.2 GHz as Solo / DualLite / Dual / Quad
CPU vendor	NXP
CPU type	Cortex-A9
Co-processor available	✗
Number of cores	1 | 2 | 4

© DH electronics GmbH

GPU available	✓
DDR3 DRAM	256 / 512 / 1024 / 2048 MB
E2Prom	128 Byte
microSD available	✓
External RTC available	✓
Bluetooth available	✗
WiFi available	✗
BSP	Linux (Debian, Yocto)
Debug interface	JTAG interface on module
Power supply	3.3 or 5 VDC
Typ. power consumption	1.5 to 4.0 W
Operating temperature	-40 to +85 °C
Storage temperature	-40 to +85 °C
Dimensions	67.6 x 36.7 x 6.5 mm

SODIMM-200 socket

Bus interface	16 Bit
Ethernet 1	10 / 100 Mbit/s
Ethernet 2	-
MMC/SD	4 Bit mode
CAN 1	1 V2.0B
CAN 2	-
UART 1	Full function, up to 5.0 Mbit/s

© DH electronics GmbH

UART 2	Rx / Tx / Rts / Cts, up to 5.0 Mbit/s
UART 3	Rx / Tx, up to 5.0 Mbit/s
SPI 1	25 MHz
SPI 2	25 MHz
I2C 1	400 kbit
I2C 2	400 kbit
USB host 1	High-speed
USB host 2	-
USB OTG	High-speed
CSI (parallel camera)	-
Display LVDS 1	60 fps
Touch	4-wire
I2S	1
Number of GPIOs	23
PWM output	1 PWM out, 16 Bit
Analog inputs	1x 12 Bit SAR converter

High-speed socket

RGMII (Gbit Ethernet)	1
SATA	Serial ATA Rev. 2.5
PCIe	PCIe 2.0 and 1.1 compliant
MIPI CSI-2 (Camera)	MIPI D-PHY support, 2-data lanes
Display LVDS 2	60 fps

© DH electronics GmbH

HDMI	Max. 1080p @60 Hz

Blockdiagramme

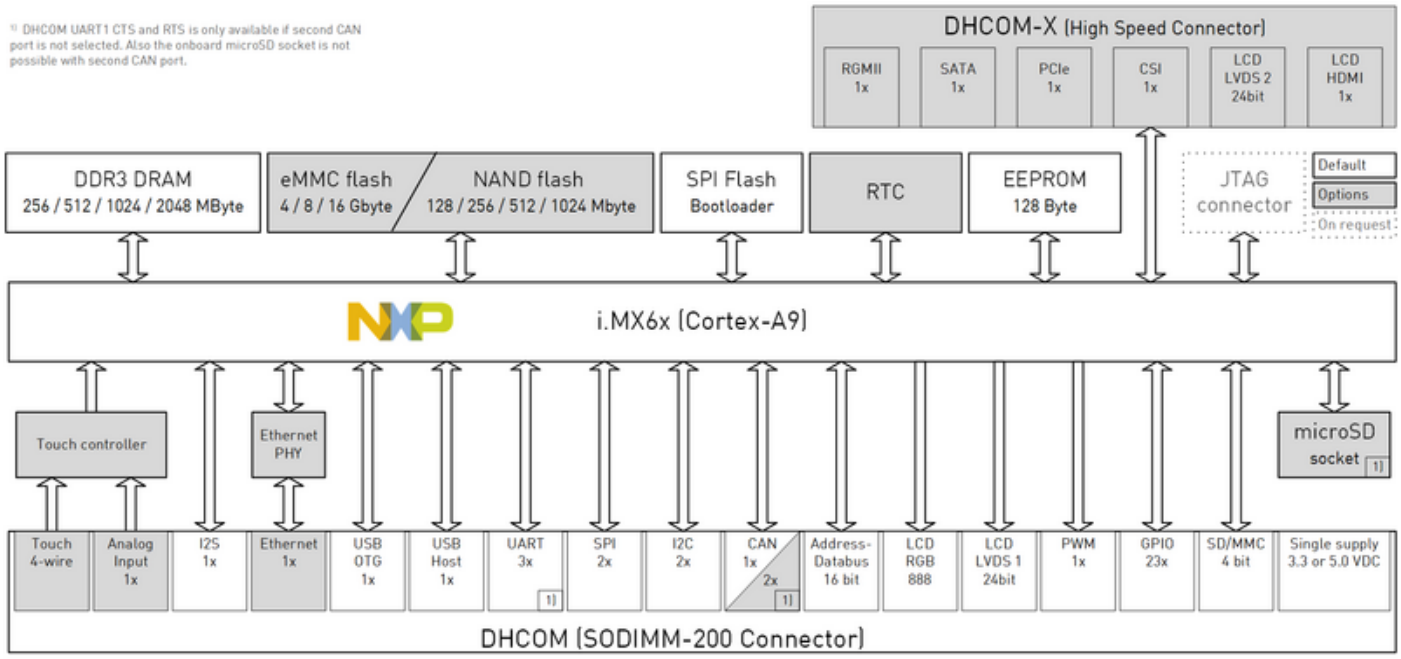

Konfigurationen

Artikelnummer	Modell	Produktbeschreibung
HI00102	DHCM-iMX6Q-C0800-R102-F0819-E-SD-RTC-T-HS-I-01D2	DHCOM i.MX6 Quad, 800 MHz, 1024 MByte DRAM, 8192 MByte eMMC flash, ethernet, microSD socket, RTC, resistive touch, Highspeed interface connector, -40 to +85 °C, DHCOM revision, SODIMM200 socket
HI00101	DHCM-iMX6DL-C0800-R102-F0819-E-SD-RTC-T-HS-I-01D2	DHCOM i.MX6 DualLite, 800 MHz, 1024 MByte DRAM, 8192 MByte eMMC flash, ethernet, microSD socket, RTC, resistive touch, Highspeed interface connector, -40 to +85 °C, DHCOM revision, SODIMM200 socket
HI00103	DHCM-iMX6S-C0800-R051-F0819-E-SD-RTC-T-HS-I-01D2	DHCOM i.MX6 Solo, 800 MHz, 512 MByte DRAM, 8192 MByte eMMC flash, ethernet, microSD socket, RTC, resistive touch, Highspeed interface connector, -40 to +85 °C, DHCOM revision, SODIMM200 socket

© DH electronics GmbH

* Andere Konfigurationen auf Anfrage

DH electronics GmbH
Am Anger 8
83346 Bergen
Deutschland

Telefon: +49 8662 4882-0
E-Mail: info@dh-electronics.com
Web: www.dh-electronics.com

© DH electronics GmbH

Wie setzt sich die Modellnummer für die Bestellung zusammen?

DHCM-CPU-Cxxx-Rxxx[-Fxxxx][-E][-CAN2][-SD][-RTC][-T][-HS][-COATING]-X-01D2

CPU	Solo: i.MX6S, DualLite: i.MX6DL, Dual: i.MX6D, Quad: i.MX6Q
Cxxx	800 MHz: C080, 1000 MHz: C100, 1200 MHz: C120
Rxxx	128 Mbyte: R012, 256 Mbyte: R025, 512 Mbyte: R051, 1024 Mbyte: R102, 2048 Mbyte: R204
X	Commercial temperature range (0 °C - 70 °C): C, Industrial temperature range (-25 °C/-40 °C - 85 °C): I, Extended commercial temperature range (-20 °C - 85 °C): EC Note: Industrial temp. range for eMMC version is -25 °C -85 °C. Please contact us for -40 °C - 85 °C version.
01D2	DHCOM Revision, SODIMM200 socket
Options	
[-Fxxxx]	128 Mbyte NAND: F0012, 256 Mbyte NAND: F0025, 512 Mbyte NAND: F0051, 1024 Mbyte NAND: F0102, 4096 Mbyte eMMC: F0409, 8192 Mbyte eMMC: F0819, 16384 Mbyte eMMC: F1638
[-E]	Ethernet
[-CAN2]	Second CAN port available Note: With second CAN port the option –SD is not possible.
[-SD]	microSD socket
[-RTC]	Low power temperature compensated real time clock (instead of CPU internal RTC)
[-T]	Resistive touch controller
[-HS]	High speed interface connector
[-COATING]	PCB and component conformal coating

© DH electronics GmbH